ZENZA BRONICA

6×7

GS-1

Advanced Function, Compact 6×7 Camera

The Zenza Bronica GS-1 features an ideally proportioned 55.6×69.0mm frame, which is about 4.5 times larger than a standard 35mm image; it therefore produces pictures with superior gradation and superb image quality.

The GS-1– an Innovative 6×7 Camera Created by the Bronica Engineering Group

The camera is an eye – used to capture a scene instantly, and with total accuracy. However, Bronica believes that a truly exceptional camera should be much more. Not only should it be highly accurate, it should reflect the creativity of the photographer. With these ideals in mind – Bronica created the GS-1. Part of an entire series which includes the 6×4.5 ETR and the 6×6 SQ, the 6×7 GS-1 offers the high precision and creative versatility that professionals demand.

Employing extremely advanced electronics technology and decades of accumulated experience, Bronica's engineers combined the functions of a large studio camera with the portability of a 35mm camera. The result – Bronica's GS-1. Sophisticated enough for the studio. Convenient enough for the field.

The GS-1's main body is designed to be as simple as possible. The lens, viewfinder, film back and other accessories work together with the body to make an integrated unit of great versatility.

The GS-1 is the first medium format camera that automatically adjusts the flash by directly metering light through the lens off the film plane. It features Bronica's unique electronically controlled Seiko lens shutter, and a flash that is adjustable for all speeds up to 1/500 second.

It is possible to select manual as well as fully automatic exposure (AE). In the manual mode, the camera works with the high precision required by professional photographers. In the automatic mode, operations are simplified for maximum operational convenience.

The GS-1's tough body weighs only 1,830 grams, including all the standard attachments, so it's great on location. This unprecedented portability, combined with state-of-the-art functions that meet the demanding needs of professionals, make the GS-1 the ultimate medium format single lens reflex camera.

The Bronica 6×7 GS-1– with Extended Internal Functions for Professional Needs

Why the GS-l is known as the most advanced medium format single lens reflex camera.

1. The GS-1 has the smallest and lightest body of all 6×7 medium format single lens reflex cameras, making it just as portable as a 35mm camera.
2. The interchangeable viewfinder system in the manual mode, and the aperture-priority TTL metering in the AE mode, greatly enhance the GS-1's capabilities.
3. The flash can be automatically controlled by direct light TTL metering off the film plane, and the lens is completely electronically controlled for solid reliability.
4. The high-performance Zenzanon PG interchangeable lens range allows you to select the optimum focal length for specific photographic conditions.
5. The format and film can be changed at any time because of the multi-functional interchangeable film back system.
6. A complete line of accessories are available to upgrade the GS-1, or alter it for different assignments.

GS-1 COMPONENTS

Tough, Compact Basic System Equipped with Advanced Functions

The main body of the GS-1 can be compared to the CPU of a computer. Top quality interchangeable accessories, such as the lens, finder, film back, focusing screen and grip, can be connected to the body as required by photographic conditions, or to achieve desired effects.
The AE finder, film back and lens send information on the intensity of light on the subject, film sensitivity and aperture to the camera body. The appropriate exposure signals, calculated in the body, are then sent to the shutter and display through electronic contacts connecting the lens, camera body and the finder. These components form a high-precision electronic interlocking system.
Bronica believes that even medium format single lens reflex cameras require high operability and portability to maximize good photographic opportunities. For reduced overall weight, the GS-1 has a light metal alloy diecast body with reinforced polycarbonate fittings. The rear side is also diecast of the same material to ensure accurate flange back dimensions.
To minimize the total weight, different materials are used for different parts. As a result, the GS-1 has the lowest weight of all 6×7 medium format single lens reflex cameras, weighing only 1,830 grams with a standard lens.
The lens shutter control mechanism, a large mirror, the winding mechanism and release mechanism are built into the main body. In addition, the camera is equipped with various safety mechanisms to prevent problems such as double exposure and non-stop winding of the film.

Swing-Back Mirror Drive Lets You Catch All the Action

The swing-back mirror drive consists of a unique mechanism in which the mirror shaft moves in a circular motion as the mirror pops up from its fixed position. With this system, the mirror, big enough for even a telephoto lens, can be moved quickly and smoothly. In addition, the built-in mirror lock mechanism allows a photographer to keep the mirror in the 'up' position for spontaneous operation. This mechanism is useful for close-ups, magnifications, super-telephoto shooting and ordinary shooting at slow shutter speeds. To take photos with the mirror up, set the AE lock or turn the operation mode to manual, then turn the mirror lock up lever. The shutter can then be fired, avoiding sound and vibration of mirror movement.

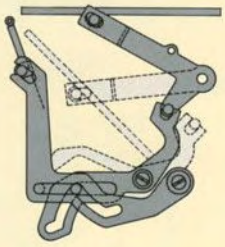

Swing-back mirror drive

GS-1 MAIN BODY

Vertical and Horizontal Free-Revolving System

When using a tripod for shooting in a studio, for close-up photography, or for landscape photography, use the GS-1's revolving tripod adapter to easily adjust vertical and horizontal screen positions.
The AE Rotary Finder G, with an eyepiece capable of 180° rotation, increases mobility and makes quick camera operation possible.

Ultra High-Precision Lens Shutter Control Mechanism

Because of the unique lens shutter system (the Seiko #0 electronically controlled system), the flash can be synchronized with all shutter speeds up to 1/500 second. The main body contains the time limit adjustment circuit, operation circuit and shutter dial. The leaf shutter incorporated into the lens system is activated by electronic signals from these circuits.

Auto-Flash Control by Direct Metering off the Film Plane

The GS-1 can automatically control light by directly measuring it off the film plane through the lens, with high exposure precision. With the TTL auto-flash control system, light reflected off the film plane after passing through the lens is directly measured by the flash sensor, and the camera's computer controls the flash for appropriate exposure. As only the light reflected from the subject is measured, the exposure is extremely accurate. And, since the aperture can be freely set, there is a wide flash adjustment range.
By using the exclusive Speed Light G-1 and Speed Grip G functions together, sophisticated photographic techniques such as bounce and diffuse flash are possible.

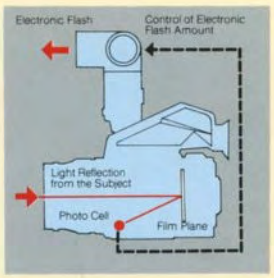

Multiple Exposure Lever for Creative Photography

The lever located at the bottom rear of the film winding crank activates the multiple exposure mode. This mode makes taking creative photos with overlaid images easy.

Front View of Main Body

Rear View of Lens

Interchangeable Finder System for Manual Mode and Aperture-Priority TTL-AE

AE Prism Finder G

Aperture-priority TTL-AE (fully automatic exposure).

The newly designed AE Prism Finder G facilitates aperture-priority center-weighted average readings, which makes it an essential element for field and action shooting. Since the finder uses the prism method, laterally correct, bright, clear images are obtained.

To take photos in the AE mode, simply set the dial on the camera body to A (Auto) and press the shutter. The exposure is automatically controlled according to the brightness of the subject. A CMOS microcomputer digitally sets the shutter speed, from 16 to 1/500 sec. in 1/8th stop increments, according to film sensitivity information from the film back, exposure information from the finder sensor and aperture information from the lens.

By lightly pressing the shutter button, the appropriate shutter speed is displayed digitally on the 7-segment LED display. This function is useful for checking the appropriate exposure before taking photos. 1/2 settings between 1/2 sec. and 1/500 sec. are also displayed.

Over/under exposure is indicated when the number 16 or 500 blinks. When the AE lock function is switched on, an orange LED indicator appears in the finder for 16 seconds. If the dark slide is still in, the lens is not mounted perfectly, the shutter is not cocked, or the film is not wound, the shutter release warning LED lights up. The LED also flashes as the shutter closes.

Manual Shooting

For creative photography using advanced techniques, set the camera to the manual mode to adjust exposure. Move the shutter speed dial out of auto lock (A) and manually set the shutter speed and aperture. The shutter speed that has been set will flash on and off on the LED display, indicating the manual mode. Variation from correct shutter speed is displayed digitally in up to ±3 steps (±3EV) on the 7-segment LED, and larger or smaller variations are indicated by a blinking 3 or −3. To adjust the exposure, turn the shutter speed dial or aperture ring until the variation displayed is 0. Exposure difference is displayed in the aperture priority mode and the shutter speed priority mode.

Providing sufficient information for exposure correction helps produce pictures that are both creative and technically superior.

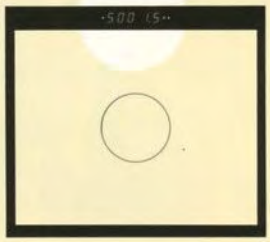

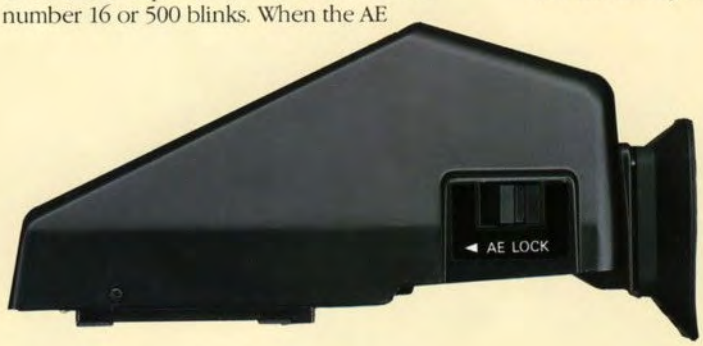

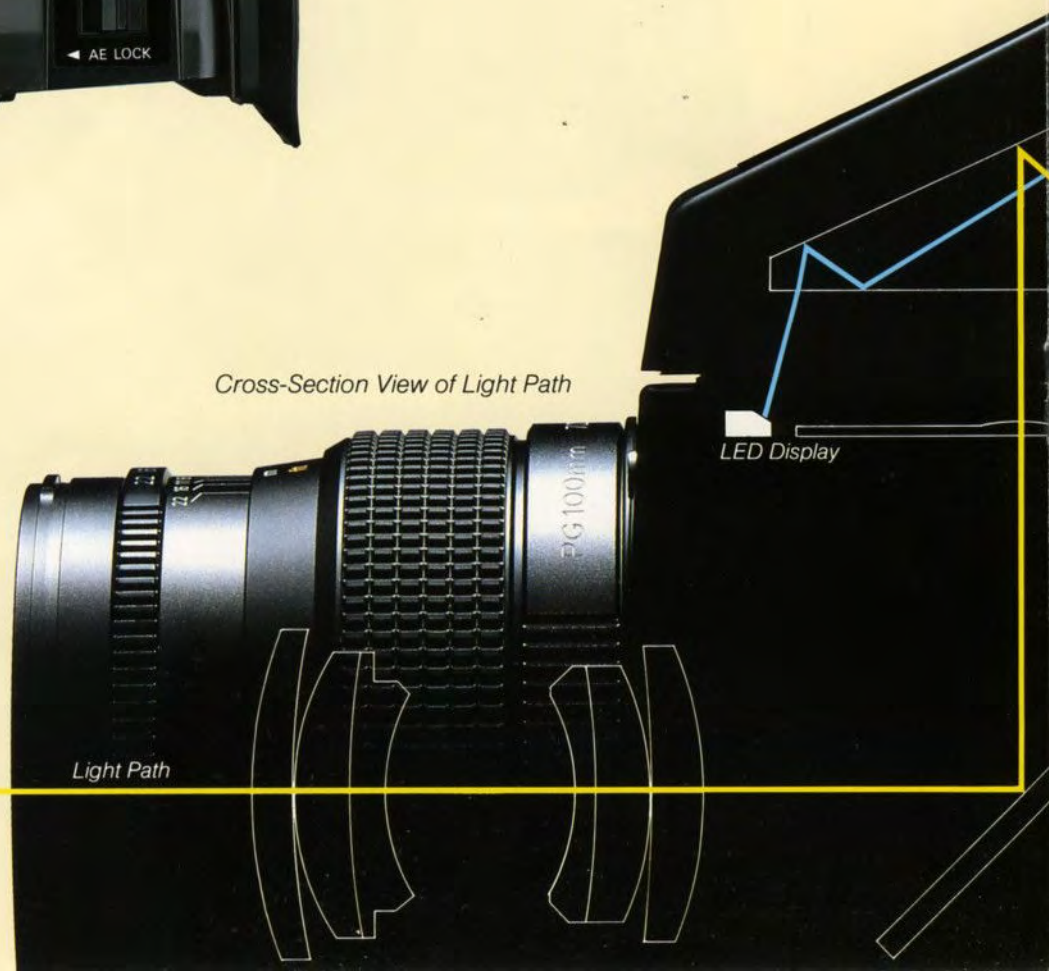

AE Rotary Finder G

Spot Exposure Measurement

Like the AE Prism Finder G, the AE Rotary Finder G has a built-in exposure meter, taking its power from the main camera body. When the camera angle is changed from horizontal to vertical, the image can be seen from above by turning the eyepiece of the finder.

The exposure measurement mechanism of the AE Rotary Finder G gives aperture priority TTL fully automatic operation. Average exposure measurement or spot exposure measurement can be selected. If the spot function is selected, an LED lamp lights to indicate that mode. The reading is taken from the center spot in the viewfinder. Appropriate exposure and other displays are the same as those of the AE Prism Finder G.

The built-in roof prism produces laterally correct images, which makes it especially handy when shooting moving subjects, from low angles, or at very short distances.

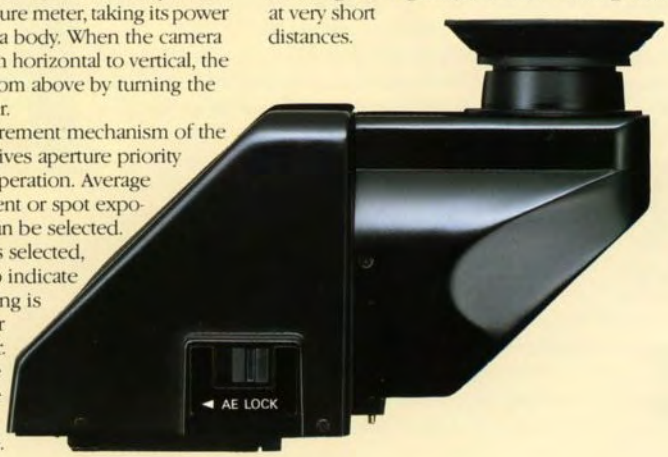

Prism Finder G

The eye level Prism Finder G portrays correct images, incorporating a newly developed total-internal-reflection prism (a combination of three prisms). Because the finder is small and lightweight, the camera handles like a 35mm single lens reflex camera. In addition, it's high magnification power, bright, laterally correct images and Speed Grip G make shooting easy, regardless of whether the camera is used in a vertical or horizontal position.

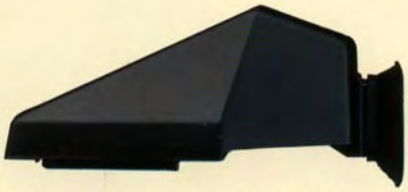

Interchangeable magnifiers for AE Prism Finder G
−4.5, −3.5, −2.5, −1.5 (standard), −0.5, +0.5, +1.5, +2.5.

Waist-Level Finder G

The compact Waist-Level Finder G is widely used for general photography and especially handy for close-ups, composition and low-angle shooting. This finder is a single action collapsible shade with flip up magnifier for critical focus. It provides good visibility because of its effective light screening. The shutter release warning LED is visible through the Waist-Level Finder G.

Interchangeable magnifiers for Waist-Level Finder G
−4.5, −3.5, −2.5, −1.5 (standard), −0.5, +0.5, +1.5, +2.5.

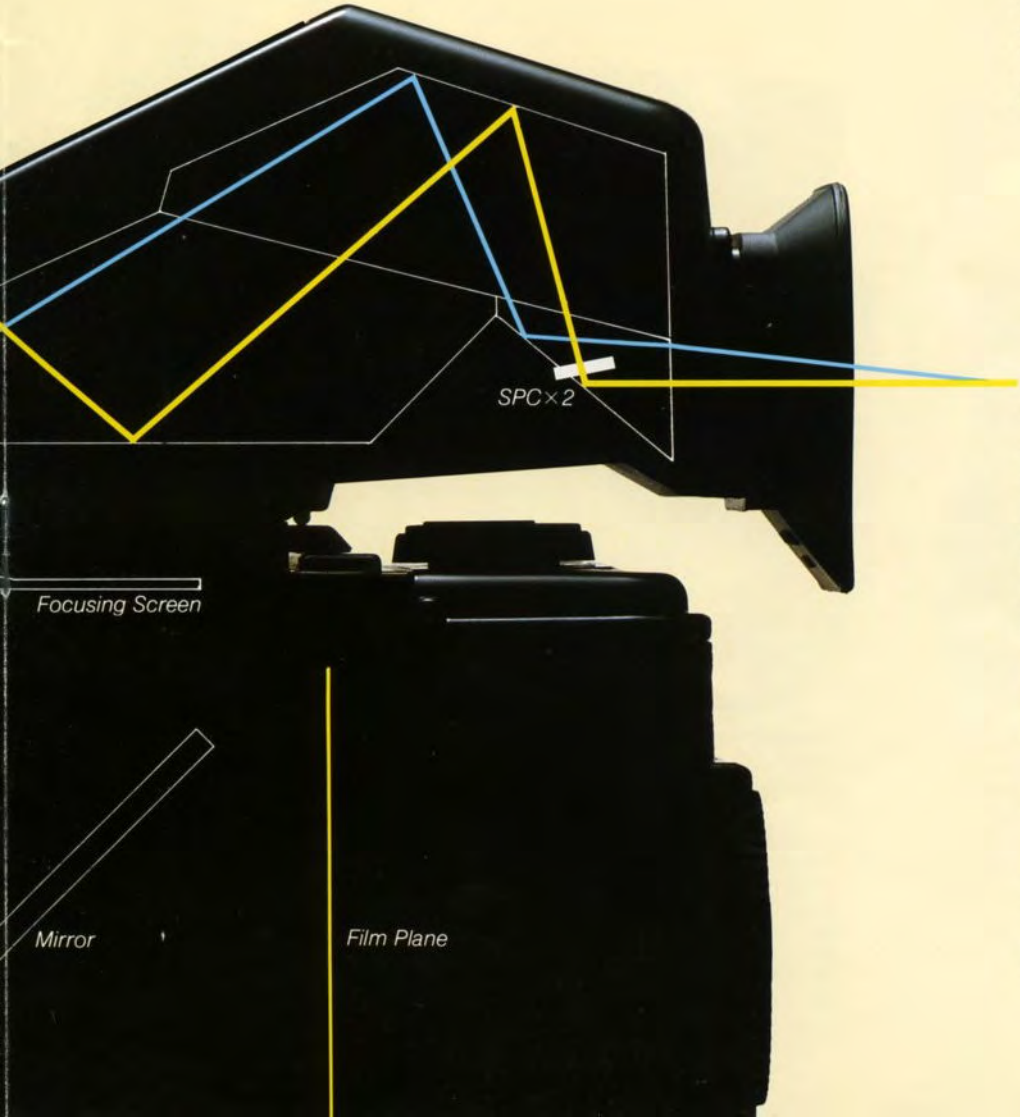

Focusing Screen G

Focusing is one of the most critical aspects of picture taking. Bronica's focusing screens have a traditional bright image which enables the photographer to snap a subject into focus swiftly and with ease. A range of focusing screens are available for the GS-1 to suit most needs of the professional photographer.

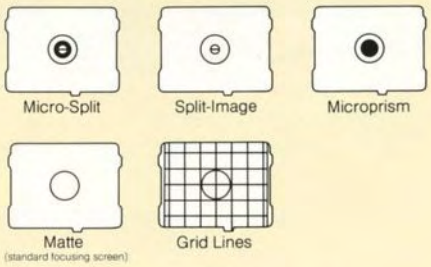

Focusing screens with 6×6, 6×4.5, 24×36 and 24×69 rulings are also available.

Electronic-Control Lens Shutter with Flash Synchronization at All Speeds Up to 1/500 Second

The GS-1 uses the Seiko #0 newly developed electronic-control lens shutter. Inside the lens barrel is a sector that opens or closes according to a signal from the control circuit in the body. This control mechanism is the first of its kind, developed by Bronica in 1976. Photography that makes full use of flash, an essential for photographic expression, is hard to perfect with the focal plane shutter of a medium format camera, which has a maximum synchronization speed of 1/30th to 1/90th of a second at most. However, since the Bronica shutter can be fully opened even at 1/500th of a second, it can be synchronized with flash at any speed up to 1/500th of a second.

Synchronization capability is especially handy for studio shooting, daylight synchronous backlit shooting and high speed portrait shooting. For synchronous shooting, the shutter speed and aperture can be freely set. Superb contrast can be captured to achieve high delineation.

The shutter speed ranges from T·B·16 seconds to 1/500 second, and can be controlled by the left hand. To prevent external bumping or pressure which may change the setting, the shutter speed dial is protected by a ring. In addition, there is a main switch on the top rear of the main body that prevents unintentional operation and drain of the battery. These safety features make the shutter extremely accurate and reliable.

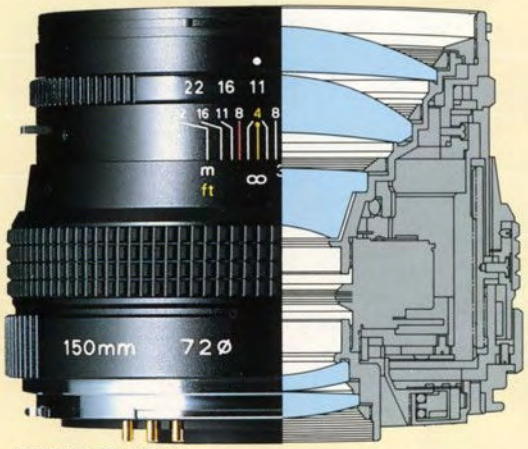

ZENZANON PG 150mm f4

Lens construction:	5 groups, 5 elements
Angle of view:	33°
Aperture:	4 to 22 fully automatic instant reopening lens diaphragm action (with half click stops)
Minimum focusing distance:	1.5m (approx. 4'11")
Shutter:	Seiko #0 (electronic control) between lens leaf shutter, shutter speed from 16 sec. to 1/500 sec. plus T (Time), B (Bulb) and A (Auto).
Filter size:	72mm
Dimensions:	62.0×87mm
Weight:	650g
35mm equivalent focal length:	75mm

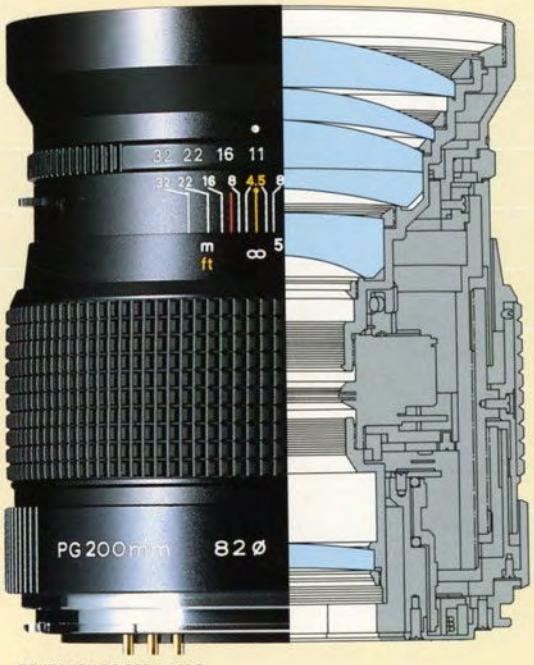

ZENZANON PG 200mm f4.5

Lens construction:	5 groups, 6 elements
Angle of view:	25.5°
Aperture:	4.5 to 32 fully automatic instant reopening lens diaphragm action (with half click stops)
Minimum focusing distance:	2m (approx. 6'6")
Shutter:	Seiko #0 (electronic control) between lens leaf shutter, shutter speed from 16 sec. to 1/500 sec. plus T (Time), B (Bulb) and A (Auto).
Filter size:	82mm
Dimensions:	97.5×87mm
Weight:	970g
35mm equivalent focal length:	100mm

ZENZANON PG 250mm f5.6

Lens construction:	
Angle of view:	
Aperture:	
Minimum focusing distance:	
Shutter:	
Filter size:	
Dimensions:	
Weight:	
35mm equivalent focal length:	

High Performance Zenzanon PG Interchangeable Lens System

Zenzanon PG Interchangeable Lenses were all developed specifically for the GS-1 body, employing computer-aided optical design and a unique multi-coating technology. Incorporating the compact Seiko #0 lens shutter system, the camera was made smaller and optical performance upgraded. Not only was abberation eliminated, but ambient light quality was increased, and contrast, sharpness and color balance were improved, enabling this group of lenses to express the finest details.

PG lenses are equipped with a shutter that opens or closes at a signal from the camera body. Shutter speeds are available from 1/500th of a second to 16 seconds. The control circuit is built into the body, and signals are transmitted through six electronic contacts located behind the lens, making the Zenzanon PG Series a group of truly innovative electronically controlled lenses. PG lenses should be mounted or removed with the shutter cocked. To mount a lens, simply insert and turn. To remove, twist off after pressing the release button. The Zenzanon PG Series also includes tele-converters that extend the focal length of lenses from 50mm to 500mm telephoto—either 1.4 or 2 times. In addition, a bellows attachment, extension tubes, close-up lenses and a professional lens hood are also available.

Zenzanon PG 150mm f 4
The 150mm PG medium range telephoto lens has a focal length which is ideal for portrait work. Due to the shorter depth of focus, background definition is reduced while bringing the subject into razor sharp focus. Because of its compact design (the 150mm PG is shorter than the standard 100mm lens), it is a very portable telephoto lens.

Zenzanon PG 200mm f 4.5
The 200mm PG lens is ideal for short telephoto photography. Because of the focal length, the background can be faded or clarified, allowing a great range of photographic expression. The lens gives a high quality image and is more compact than other lenses of the same focal length.

Zenzanon PG 250mm f 5.6
The 250mm PG lens gives a true telephoto image, pulling in distant landscapes for breathtaking shots, and compressing foreground and background for dynamic effects. High resolution and multi-coating allow this telephoto lens to produce high quality reproductions.

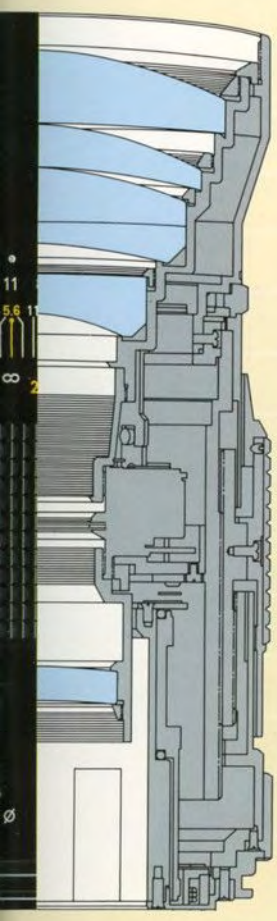

	5 groups, 6 elements
	20.5°
	5.6 to 32 fully automatic instant reopening lens diaphragm action (with half click stops)
	3m (approx. 9'10")
	Seiko #0 (electronic control) between lens leaf shutter, shutter speed from 16 sec. to 1/500 sec. plus T (Time), B (Bulb) and A (Auto).
	82mm
	142.0 × 87mm
	1200g
	125mm

MACRO ZENZANON PG 110mm f4

Lens construction:	4 groups, 6 elements
Angle of view:	44.5°
Aperture:	4 to 32 fully automatic instant reopening lens diaphragm action (with half click stops)
Minimum focusing distance:	0.66m (approx. 2'2")
Shutter:	Seiko #0 (electronic control) between lens leaf shutter, shutter speed from 16 sec. to 1/500 sec. plus T (Time), B (Bulb) and A (Auto).
Filter size:	72mm
Dimensions:	78.5 × 87mm
Weight:	725g
35mm equivalent focal length:	55mm

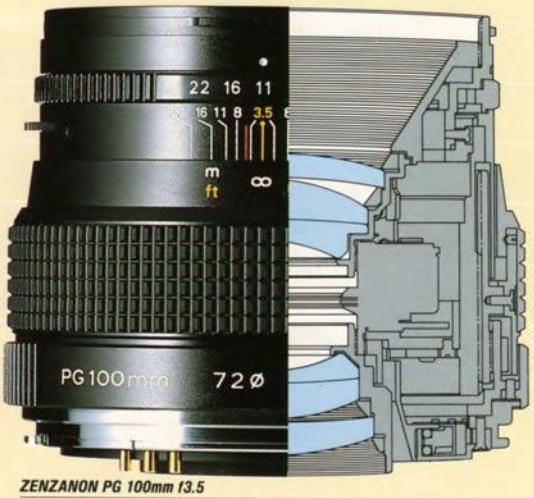

ZENZANON PG 100mm f3.5

Lens construction:	4 groups, 6 elements
Angle of view:	48°
Aperture:	3.5 to 22 fully automatic instant reopening lens diaphragm action (with half click stops)
Minimum focusing distance:	0.75m (approx. 2'5")
Shutter:	Seiko #0 (electronic control) between lens leaf shutter, shutter speed from 16 sec. to 1/500 sec. plus T (Time), B (Bulb) and A (Auto).
Filter size:	72mm
Dimensions:	67.5 × 87mm
Weight:	630g
35mm equivalent focal length:	50mm

Macro Zenzanon PG 110mm f 4
This 110mm PG lens is designed to compensate for aberrations in short-distance macro photography, but it can also be used as a general purpose lens. The minimum focusing distance is 66cm, however it has a long working distance and a maximum magnification ratio of 1:4. This lens is perfect for commercial photography and document copying, producing sharp images free of distortion and field curvature.

Zenzanon PG 100mm f 3.5
This standard lens is equivalent to a 50mm lens for 35mm cameras. The maximum F stop is suppressed to 3.5, providing more than sufficient optical performance. Aberrations are eliminated with balance compensation. This all-round lens produces realistic images, is very easy to use and is handy for close-range (as close as 75cm) shooting.

Zenzanon PG 65mm f 4
This 65mm PG lens avoids perspective exaggeration and subject distortion, common problems with wide-angle lenses. The angle of view is nearly the same as that of a person's eye. This very practical lens can be considered to be both a standard lens and a wide-angle lens. It eliminates aberrations and maintains uniform color balance.

Zenzanon PG 50mm f 4.5
Both background and foreground are photographed with exceptional sharpness with this super-wide-angle lens. The increased depth of field and expanded perspective produce a unique effect. Distortions, common with other super-wide-angle lenses, have been eliminated, and superb color balance and natural images are easily obtained.

Zenzanon PG 500mm f 8
(under development)
With a high telephoto rate of 0.68, this compact lens produces the strongest telephoto effects among the PG Series of lenses. However, the 500mm PG is free from color aberrations common to telephoto lenses in the past, and it produces very sharp, high contrast images.
Color aberration compensation is achieved with two low-reflective indexes, and low-distribution glasses with anomalous dispersion in the optical system. As other types of aberrations have also been corrected, the 500mm PG produces a very detailed, high quality picture.

ZENZANON PG 500mm f8

Lens construction:	10 groups, 11 elements
Angle of view:	10.3°
Aperture:	8 to 64 fully automatic instant reopening lens diaphragm action (with half click stops)
Minimum focusing distance:	8m (approx. 26'3")
Shutter:	Seiko #0 (electronic control) between lens leaf shutter, shutter speed from 16 sec. to 1/500 sec. plus T (Time), B (Bulb) and A (Auto).
Filter size:	122mm
Dimensions:	307.5 × 139mm
Weight:	3760g
35mm equivalent focal length:	250mm

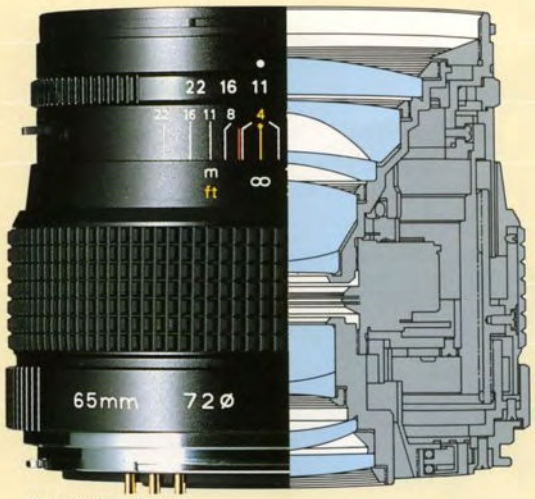

ZENZANON PG 65mm f4

Lens construction:	7 groups, 9 elements
Angle of view:	68.5°
Aperture:	4 to 22 fully automatic instant reopening lens diaphragm action (with half click stops)
Minimum focusing distance:	0.6m (approx. 2'11")
Shutter:	Seiko #0 (electronic control) between lens leaf shutter, shutter speed from 16 sec. to 1/500 sec. plus T (Time), B (Bulb) and A (Auto).
Filter size:	72mm
Dimensions:	71.0 × 87mm
Weight:	715g
35mm equivalent focal length:	33mm

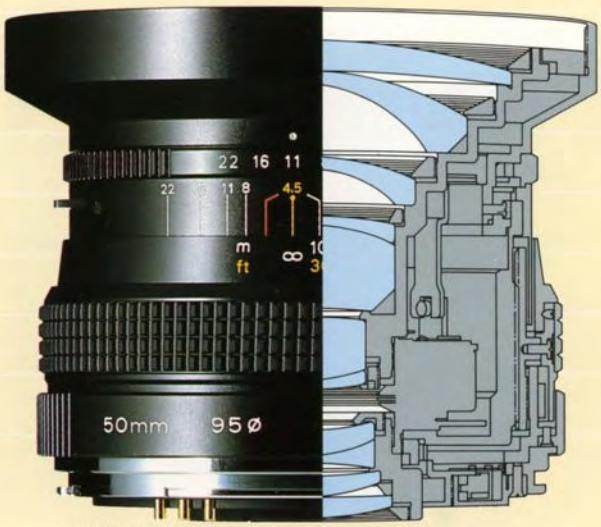

ZENZANON PG 50mm f4.5

Lens construction:	8 groups, 11 elements
Angle of view:	83°
Aperture:	4.5 to 22 fully automatic instant reopening lens diaphragm action (with half click stops)
Minimum focusing distance:	0.5m (approx. 1'7")
Shutter:	Seiko #0 (electronic control) between lens leaf shutter, shutter speed from 16 sec. to 1/500 sec. plus T (Time), B (Bulb) and A (Auto).
Filter size:	95mm
Dimensions:	74 × 98mm
Weight:	790g
35mm equivalent focal length:	25mm

Thorough Lens Quality Control

At Bronica, the development and design of lenses is given primary importance. Bronica prides itself on its total production system – from computer aided optical design to grinding, centering, assembly and quality control using the latest machinery. Computer simulation is used to thoroughly study imaging performance and color reproductivity, and to alleviate optical "noise," such as ghosts, flares and other problems.

Zenzanon PG series lenses do not compromise on color balance, contrast, or resolution. Each and every lens is popular among professionals for the natural images it produces. Product quality is improved by various computers, adjustment units arranged in the production process, and quality control technologies using highly sophisticated test equipment. For example, the auto-focus auto-collimator adjusts the flange back of the lens, and the Modulation Transfer Function (MTF) unit evaluates overall characteristics of the lens, such as resolution and contrast.

Lens performance is improved by making full use of available equipment. Bronica uses centering technology with laser beams at a precision of 0 seconds, as well as its own unique multi-coating technology to make the lenses perform well even under poor conditions, such as backlighting. Lenses then undergo strict quality checks, and only those that pass are marketed as Zenzanon PG lenses. Only top quality lenses can meet the complicated needs of professionals.

Multi-Coating Reduces "Noise"

Ghosts, flare and other optical "noise" that can ruin good photography have been reduced to a minimum with Bronica's new improved multi-coating. Unnecessary hazardous light is eliminated and high-quality images are created. This revolutionary multi-coating technology reduces lens surface reflection to about one tenth that of single coating, and improves light transmission in the visible light wave length ranging from 400 to 700 nanometers. Even under poor conditions, such as backlighting, clear, natural images are produced with a minimum of ghosts and flares.

COMPARISON OF SPECTRUM REFLECTION CHARACTERISTIC OF MULTI-COATING.

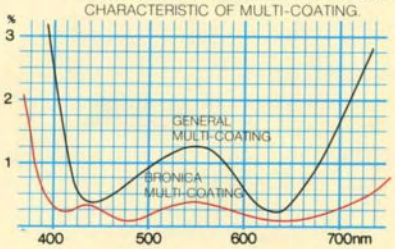

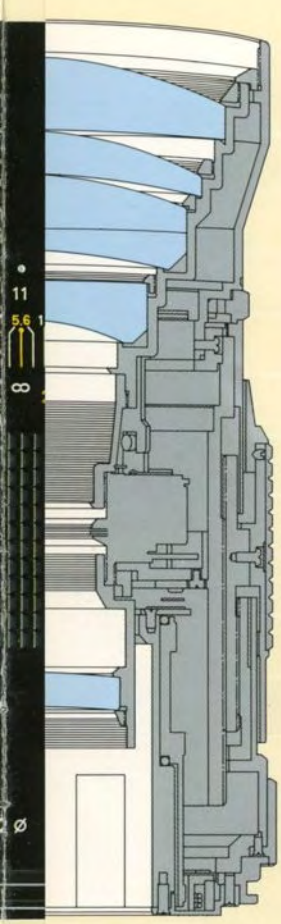

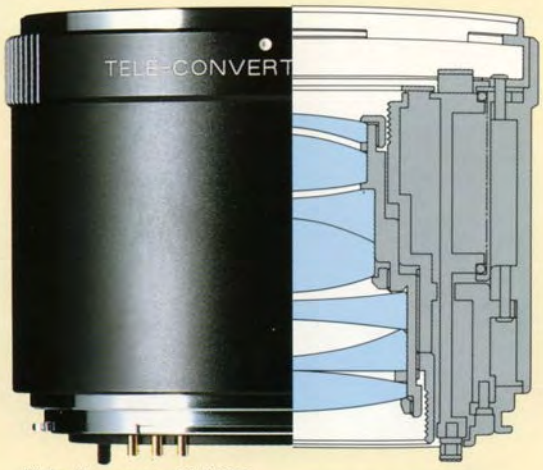

Tele-Converter G 2.OX

The Tele-Converter G2.OX has a 6 group, 7 element lens configuration. When mounted between the prime lens and body, the effective focal length is doubled. The image magnification rate can be expanded without affecting the minimum focusing distance of the prime lens. This tele-converter, designed for PG lenses, helps produce high contrast, sharp images.

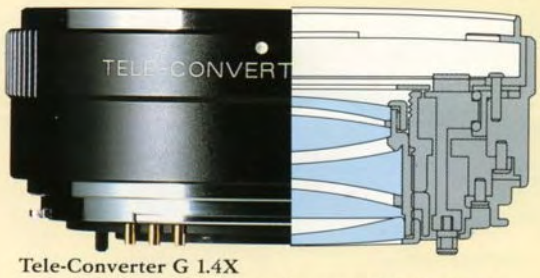

Tele-Converter G 1.4X

The general purpose, high performance Tele-Converter G1.4X is a 5 group, 5 element rear converter type lens configuration. The focal length of the prime lens is extended 1.4 times, but the aperture is reduced by only one stop. This tele-converter is very compact, and can be easily used with a telephoto lens.

Multi-Functional Interchangeable Film Back System

Selecting a film type is the first step in photographic expression. Bronica's traditional interchangeable film back function, in which the film back (film cartridge part) can be freely attached or removed, proves particularly useful for 6×7 format photography.
Bronica has been using this system since the introduction of its first camera in 1959. Because film can be interchanged (e.g. positive film with negative, B/W with color, or films of different sensitivities) equipment for overseas or longterm assignments can be minimized. In addition, if Bronica's exclusive film backs are used, 6×6 and 6×4.5 format photographs can also be taken using 120 or 220 film. The 24×69mm frame (length and width ratio: 2.875) with 35mm film provides opportunities for new effects. Bronica also developed the Polaroid Film Back in cooperation with the Polaroid Corporation.

With this film back, composition, exposure and lighting can be easily and quickly checked.
When the dark slide is inserted, the film back can be changed rapidly, and shooting restarted within seconds. Each film back has an ASA/ISO sensitivity dial so that the necessary film sensitivity is automatically registered when an AE finder is used. Exposure compensation can be made up to ±3 stops in increments of 1/3.
As adjustment dials are located on the back cover, they are easy to operate. The film back can be changed without worrying about winding, and the "intelligent" connection prevents problems while winding. A double safety lock mechanism is also built in to keep the dark slide in when the film back is removed from the camera body.

Rear View of Filmback

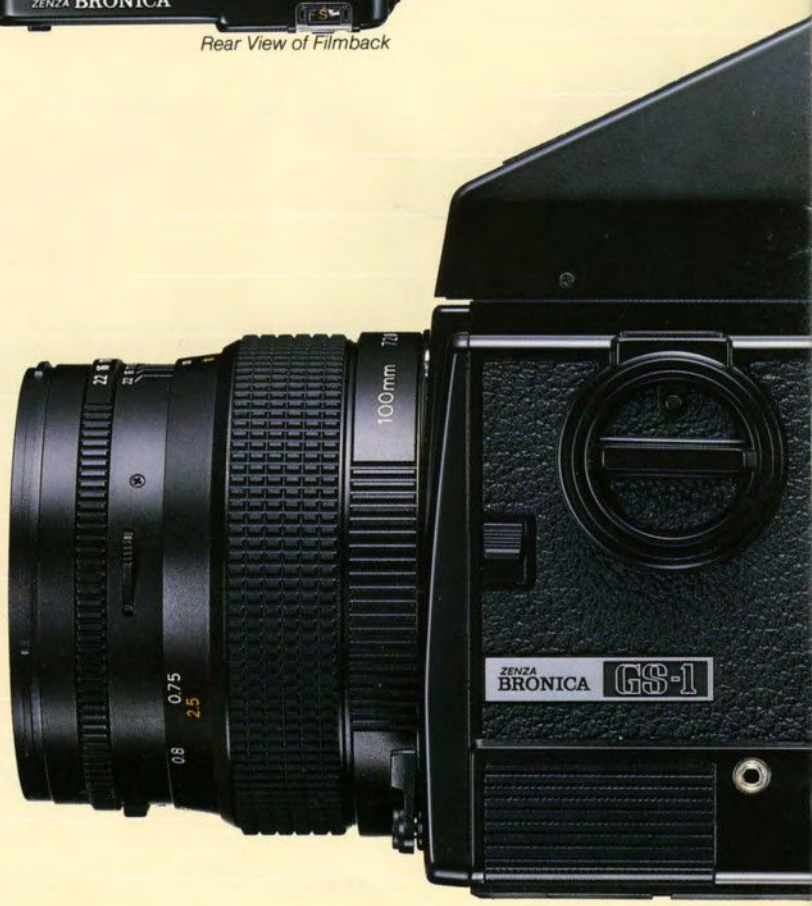

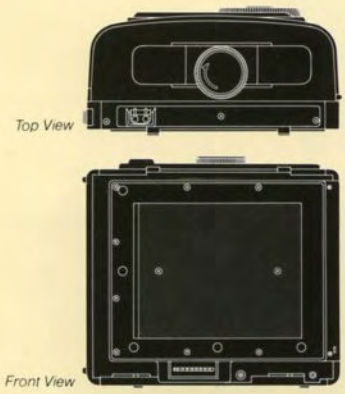

Film Back GS120/220 (6×7)
These two film backs are for 6×7cm format photography. The GS120 uses 10 exposure 120 roll film exclusively, and the GS220 uses 20 exposure 220 roll film. Film is wound with the crank of the main camera body to prevent double exposure and continuous non-stop film winding trouble.

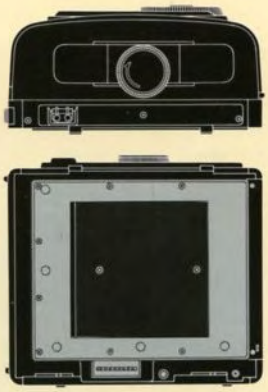

Film Back GS120/220 (6×6)
The 6×6cm format Film Back GS120 is exclusively for 12 exposure 120 roll film. The film back cannot be removed until the dark slide is inserted and the film back release button is pressed.
If the dark slide is not removed, the shutter will not work.

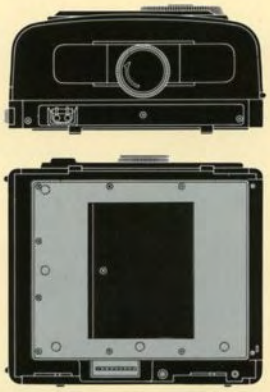

Film Back GS120/220 (6×4.5)
This film back is available for 6×4.5cm format photography. Since the film is fed sideways, vertical format images are created when the camera is used in the horizontal position. This film back is especially handy for large numbers of exposures, such as ID photos. The Film Back GS120 is for 15 exposure 120 roll film, and the GS220 for 30 exposure 220 roll film.

Film Back GS135-SW (24×69)
(under development)
This film back is for 135 roll film. The frame is almost twice as large as usual, and produces greater panoramic effects than the 24×54mm format ETR SQ series system.

Film Back GS135-N (24×36)
(under development)
This film back is for 135 roll film.
Wide variety of films available, from extremely fine grain to ultra high-speed.

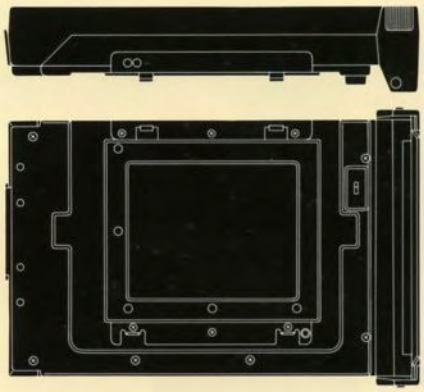

Polaroid Film Back G
The Polaroid Film Back G was developed jointly with the Polaroid Corporation. Pictures are provided immediately for checking composition, exposure and lighting. The ASA/ISO switch (75/3000) is coupled to the Bronica viewfinder with built-in metering. Available film types are 665, 667, 668, 669, 107, 108, 87 and 88.

The GS 6×6, 6×4.5, N24×36 and SW 24×69 film backs use a material with the same reflectability as the film to improve the precision of auto-flash control by directly metering the light off the film plane.

GS-1 Accessory Systems

Bronica is trying to produce not mere accessories, but systems that are electronically interlocked in terms of function. In the planning and basic design stages of a camera, thorough studies are made into the development and capabilities of system configuration. Accessories are not mere attachments, but are important components. With this in mind, Bronica keeps developing systems to meet the infinite variety of photographers' tastes and needs.

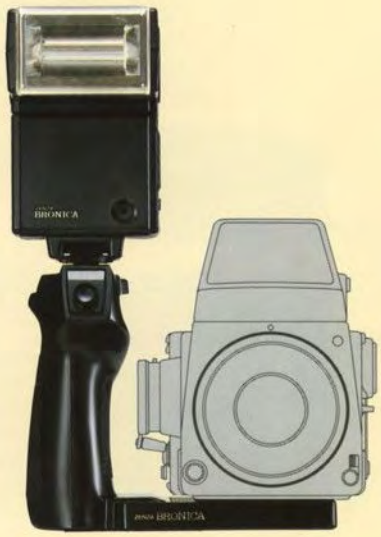

Speed Grip G
The Speed Grip G is not only a grip for holding, it is a multi-purpose feature, consistent with Bronica's unique concept of system expansion. It provides remarkable mobility and handling ease when the GS-1 is used at eye level in location work or for action photography. With the Speed Grip G held in the right hand, the lever wind and shutter release positions make the GS-1 as easy to operate as a 35mm camera. A double stroke of the lever to set the shutter and advance the film is needed, and the camera is fired by smooth pressure on the shutter release button.

Exclusive Speed Light G-1
The exclusive Speed Light G-1 was developed especially for the GS-1. Combined with a light measuring element, it automatically adjusts through the lens light by directly metering it off the film plane, regardless of the shutter speed and aperture. The Speed Light G-1 clips-on, and should be used with the Speed Grip.
The Guide Number 32 (Full, 1/2, 1/4, or 1/8 selectable) indicators for the direction of the flash (up, down, right, or left respectively), are variable up to 90 degrees for bounce photography.

Revolving Tripod Adapter G
The GS-1 is designed to be compact enough to be hand held. However, if a tripod is necessary for studio shooting and landscape photography, you can use the Revolving Tripod Adapter G which is a very convenient accessory for taking horizontal and vertical pictures. Mobility is increased even more when it is used with the AE Rotary Finder G with 180° rotatable eyepiece.

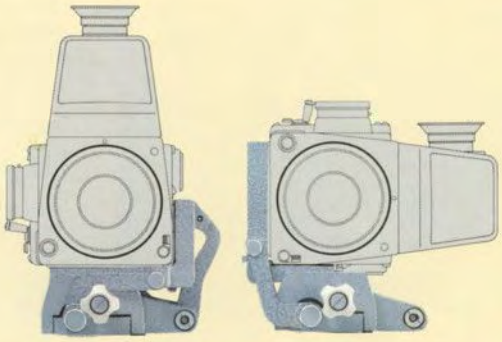

Professional Lens Hood G

Bellows Attachment G (under development)
Photographic magnification in close-ups can be adjusted within a wide range by expanding or contracting the bellows. To use the bellows, remove the lens from the camera body, attach the unit directly to the camera body, and remount the lens on the end of the bellows.

Auto Extension Tubes G-18, G-36
These auto extension tubes, mounted between the camera and lens, make close-up shooting easy. Automatic diaphragm action, full aperture exposure metering and lens shutter mechanism can all be used with these extension tubes.
When using the AE Finder G or AE Rotary Finder G, exposure compensations are taken care of automatically, regardless of the exposure factor, simplifying close-up shooting.

Close-Up Lens G No. 1/No. 2
When screwed onto the front of the lens, these close-up lenses make exposure considerations unnecessary.

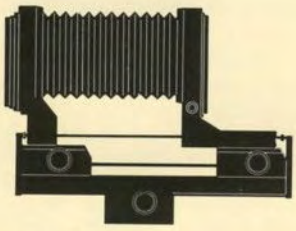

PHOTOGRAPHIC MAGNIFICATION OF CLOSE-UP LENSES

Lens type	Close-Up Lens No.1	Close-Up Lens No.2	Close-Up Lenses No.1 + No.2
65mm f4	0.13 ~ 0.28	0.26 ~ 0.41	0.38 ~ 0.53
100mm f3.5	0.20 ~ 0.40	0.40 ~ 0.61	0.59 ~ 0.81
150mm f4	0.30 ~ 0.46	0.60 ~ 0.80	0.89 ~ 1.12
110mm f4	0.21 ~ 0.48	0.43 ~ 0.72	0.64 ~ 0.94

G-18 CLOSE-UP DATA

Lens type	Focusing ring setting	Magnification	Area photographed (cm)	Object-to-film plane (cm)	Object-to-front lens (cm)	Exposure factor
50mm	Infinity	0.36	15.4 × 19.2	30.5	12.8	1.4
	Maximum extension	0.51	10.9 × 13.5	27.2	8.7	1.6
65mm	Infinity	0.28	20.1 × 24.9	41.1	23.7	1.4
	Maximum extension	0.43	12.9 × 16.0	33.7	15.3	1.6
100mm	Infinity	0.18	30.9 × 38.3	76.5	59.5	1.4
	Maximum extension	0.37	15.1 × 18.7	50.0	31.0	1.8
Macro 110mm	Infinity	0.17	33.4 × 41.4	86.9	68.8	1.3
	Maximum extension	0.42	13.2 × 16.3	50.5	29.6	2.0
150mm	Infinity	0.12	46.3 × 57.5	157	140	1.4
	Maximum extension	0.25	22.2 × 27.6	93.5	75.1	1.9
200mm	Infinity	0.09	60.5 × 75.1	255	235	1.3
	Maximum extension	0.22	25.3 × 31.4	133	111	1.9
250mm	Infinity	0.07	75.7 × 93.9	385	361	1.3
	Maximum extension	0.18	31.6 × 39.2	194	167	1.7

G-36 CLOSE-UP DATA

Lens type	Focusing ring setting	Magnification	Area photographed (cm)	Object-to-film plane (cm)	Object-to-front lens (cm)	Exposure factor
50mm	Infinity	0.72	7.7 × 9.6	25.4	5.9	1.9
	Maximum extension	0.87	6.4 × 7.9	24.9	4.7	2.1
65mm	Infinity	0.55	10.0 × 12.5	31.2	12.0	1.8
	Maximum extension	0.71	7.8 × 9.7	29.6	9.4	2.0
100mm	Infinity	0.36	15.4 × 19.2	50.6	31.7	1.8
	Maximum extension	0.55	10.1 × 12.6	42.9	22.2	2.3
Macro 110mm	Infinity	0.33	16.7 × 20.7	56.3	36.4	1.7
	Maximum extension	0.59	9.4 × 11.7	45.0	22.3	2.4
150mm	Infinity	0.24	23.2 × 28.8	95.9	77.6	1.9
	Maximum extension	0.37	15.0 × 18.6	75.8	55.6	2.4
200mm	Infinity	0.18	30.3 × 37.6	150	128	1.7
	Maximum extension	0.31	17.8 × 22.1	109	84.4	2.3
250mm	Infinity	0.15	37.8 × 47.0	220	194	1.6
	Maximum extension	0.25	22.3 × 27.7	154	126	2.1

GS-1 SYSTEM DIAGRAM

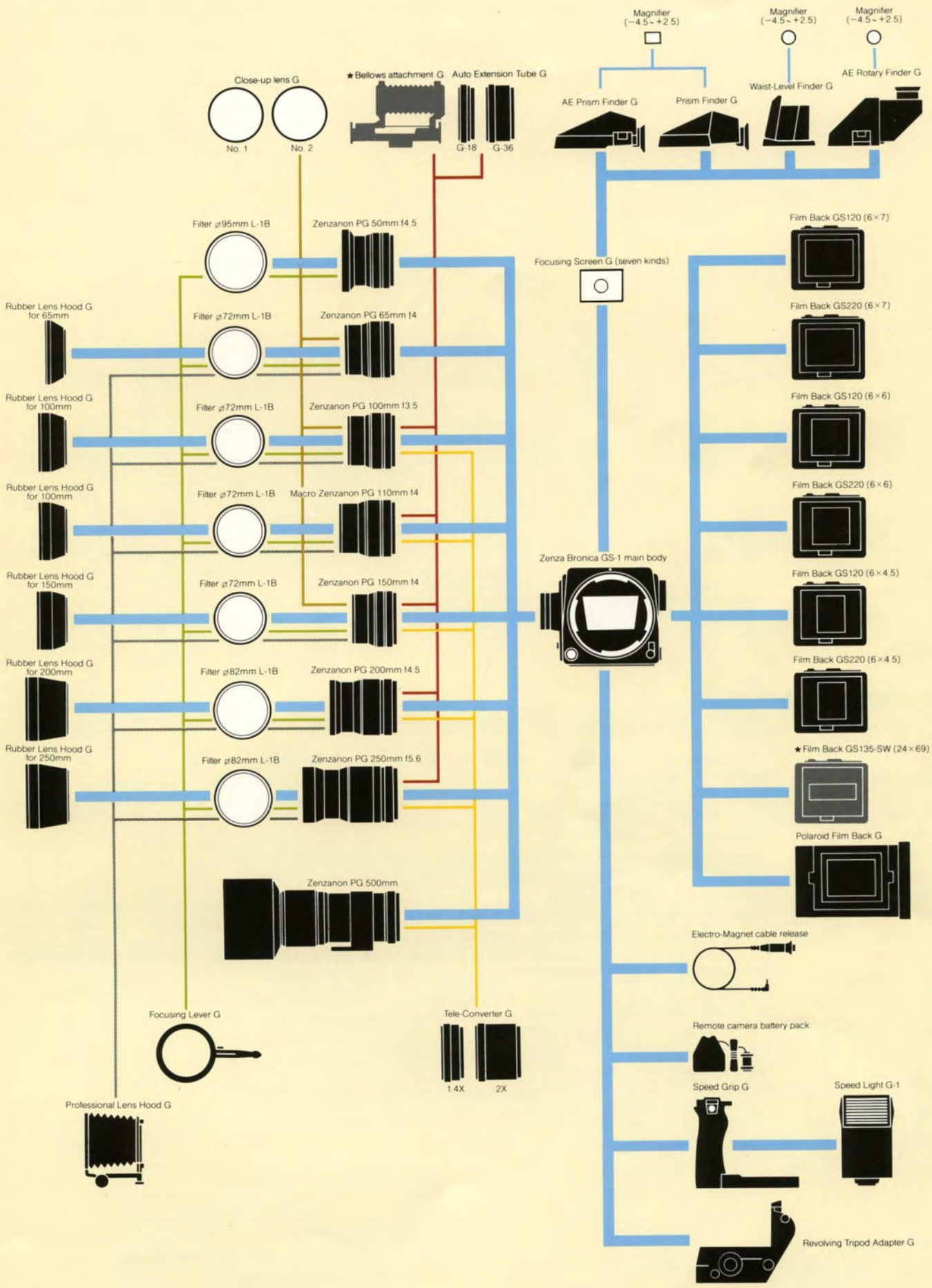

★ Under development

ZENZA BRONICA

ZENZA BRONICA GS-1 SPECIFICATIONS

Type:	6cm×7cm format lens shutter single lens reflex camera, with interchangeable lens, film back, finder and focusing screen system
Frame size:	55.6mm×69.0mm
Film:	120 and 220 roll film, 135 roll film in film cartridge and Polaroid Pack Film (exclusive film backs for each film type)
Standard lens:	ZENZANON PG 100mm f3.5 lens: six elements in four groups, multi-layer anti-reflection coated; 48 angle of view; f22 minimum aperture; 0.75m minimum focusing distance; 72mm filter
Lens mount:	Exclusive four-claw Bronica GS bayonet mount
Focusing:	Helical focusing system built into each lens
Lens diaphragm:	Fully automatic instant reopening lens diaphragm: Equal distant aperture scale graduations; half-click stops
Shutter:	Electronic control Seiko #0 between lens leaf shutter: shutter speeds T•B•16 second to 1/500 second & A
Winding:	One full rotation, or ratchet winding possible
Multiple exposure:	Multiple exposure possible with lever on main camera body
Mirror lock-up:	Mirror lock-up possible with switch lever on main camera body for single or continuous shooting
Film back:	Interchangeable: Exclusive film backs for 120, 220 and 135 roll film and Polaroid Pack Film; with ASA/ISO film speed dial and exposure compensation dial coupled to the finder with built-in exposure meter
Finder:	Interchangeable
Finder screen:	Interchangeable: Full-area matte screen (standard)
Flash synchronization:	X-setting only (synchs to all speeds up to 1/500 sec.)
Battery checking:	Shutter speed LED lights up or flashes when shutter button is pressed half way
Battery:	Single 6V alkaline or silver oxide battery
Dimensions:	106.5mm wide×117.7mm high×196.5mm long (main body with standard lens, film back and waist-level finder)
Weight:	1,830g (with above accessories, battery not included)

Designs and specifications are subject to change without notice.

GMI PHOTOGRAPHIC, INC.
1776 New Highway, P.O. Drawer U,
Farmingdale, New York 11735, U.S.A.
Telex No. 645159 HINDAPHOT FDLE (VIA WUI)
221637 GMI UR (VIA RCA)
Phone No. (516)752-0066
(516)752-7726 (Service Dept.)

BRONICA CO., LTD.
662 Bijogi, Toda-shi, Saitama-Prefecture 335, Japan
Telephone: (0484) 22-0003
Cable Address: "BRONICA WARABI"
Telex Call No. 02962733 BRONC J
Fax: (0484) 21-2413

8508500C Printed in Japan